FA 50 217 22B





REF.	FA 50 217 22B
CE	EN 362:2004 Class B
	23 kN / 21 mm
MAT.	ALU
	QUARTER
KEYLOCK	YES
+	INDIVIDUAL NUMBER
kg	0.09 KG

	MAT.	
Résistance à la rupture / Ouverture	**Matière**	**Type d'ouverture**
Breaking strength / Gate opening	Material	Opening system
Resistencia a la ruptura / Apertura	**Material**	**Tipo de apertura**
Resistenza alla rottura / Apertura	Materia	Sistema di apertura
Bruchfestigkeit / Öffnung	**Material**	**Öffnungssystem**

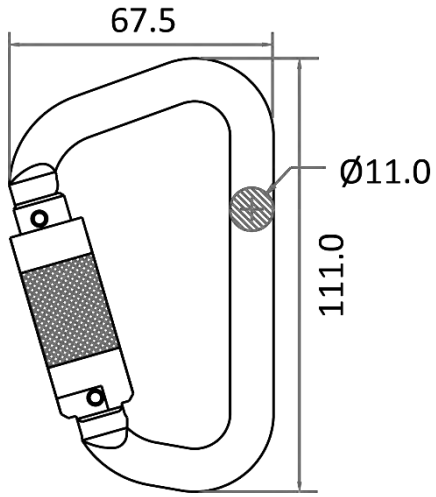

HS CODE
76169990
CARTON SIZE / PCS.
58x38x23/200
AET (EU) N°2777/10763-01/E01-01
Satra Technology Europe Ltd., N° 2777, Bracetown Business Park, Clonee, Dublin, D15YN2P, Ireland
MODULE D FI14/14003.02
SGS Fimko Oy, N°0598 Takomotie 8, 00380 HELSINKI, Finland